The Power of Time Reversal in Hamiltonian Property Testing

Richard Allen (MIT) Matthias Caro (Warwick) Yanlin Chen (Maryland)
Tom Gur (Cambridge) **Angus Lowe** (MIT)

University of Waterloo · November 24, 2026

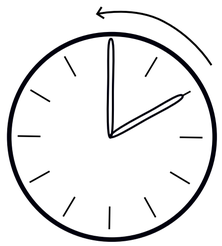

arXiv:2610.04996

Outline

1. Background & Problem Statement
2. Main Results
3. Proof Sketch
4. Conclusion & Future Directions

Time Reversal in Quantum Information

Time reversal is a key step in many tasks across QI

Time Reversal in Quantum Information

access to both e^{-iHt} *and* e^{+iHt}

Time reversal is a key step in many tasks across QI

Time Reversal in Quantum Information

access to both $e^{-\mathrm{iHt}}$ *and* $e^{+\mathrm{iHt}}$

Time reversal is a key step in many tasks across QI

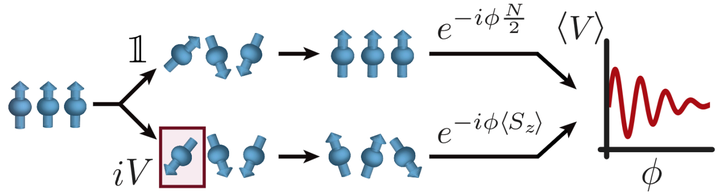

Quantum sensing [1]

[1] Kobrin et al. — *A Universal Protocol for Quantum-Enhanced Sensing via Information Scrambling* (2024)

Time Reversal in Quantum Information

access to both e^{-iHt} *and* e^{+iHt}

Time reversal is a key step in many tasks across QI

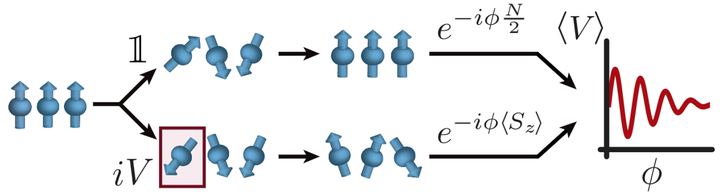

Quantum sensing [1]

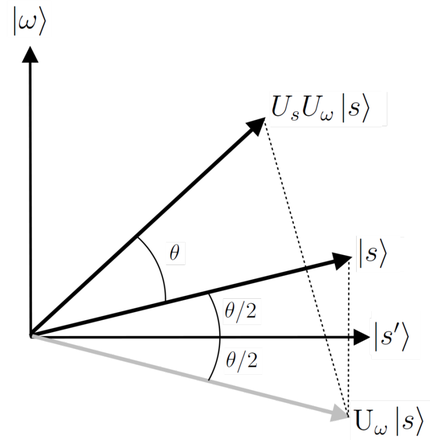

Quantum algorithms [2]

[1] Kobrin et al. — *A Universal Protocol for Quantum-Enhanced Sensing via Information Scrambling* (2024)

[2] Wikipedia. — *Grover's algorithm*

Time Reversal in Quantum Information

access to both e^{-iHt} *and* e^{+iHt}

Time reversal is a key step in many tasks across QI

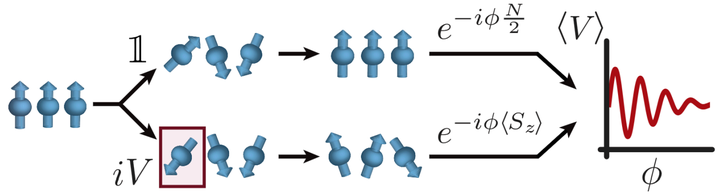

Quantum sensing [1]

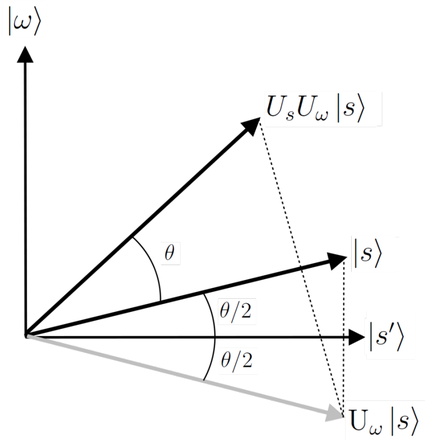

Quantum algorithms [2]

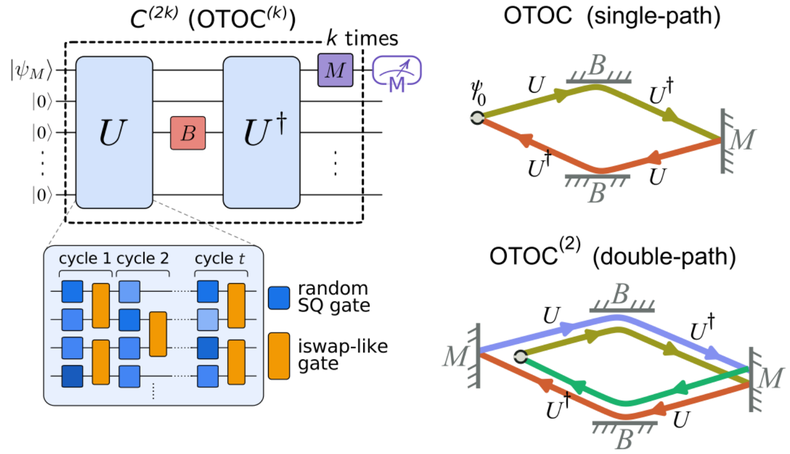

Many-body quantum systems [3]

[1] Kobrin et al. — *A Universal Protocol for Quantum-Enhanced Sensing via Information Scrambling* (2024)
[2] Wikipedia. — *Grover's algorithm*
[3] Google Quantum AI. — *Observation of constructive interference at the edge of quantum ergodicity* (2025)

Time Reversal in Quantum Information

access to both e^{-iHt} *and* e^{+iHt}

Time reversal is a key step in many tasks across QI

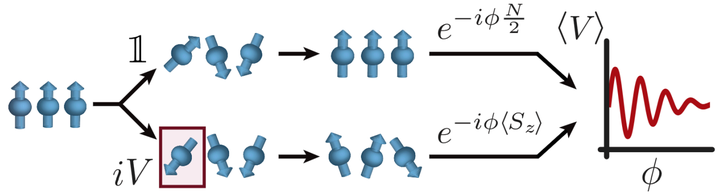

Quantum sensing [1]

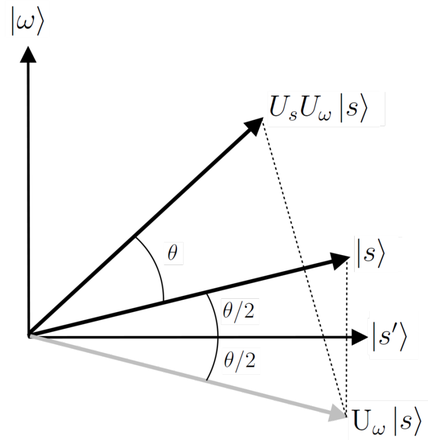

Quantum algorithms [2]

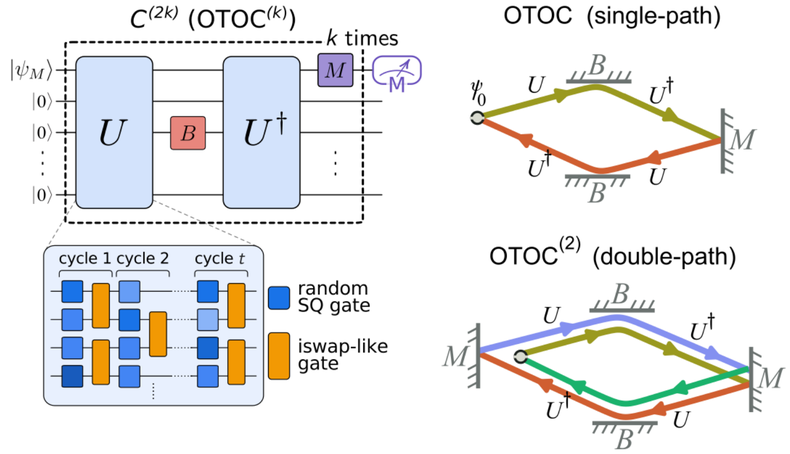

Many-body quantum systems [3]

Q: *When is time reversal truly required?*

[1] Kobrin et al. — *A Universal Protocol for Quantum-Enhanced Sensing via Information Scrambling* (2024)
[2] Wikipedia. — *Grover's algorithm*
[3] Google Quantum AI. — *Observation of constructive interference at the edge of quantum ergodicity* (2025)

Hamiltonian Property Testing

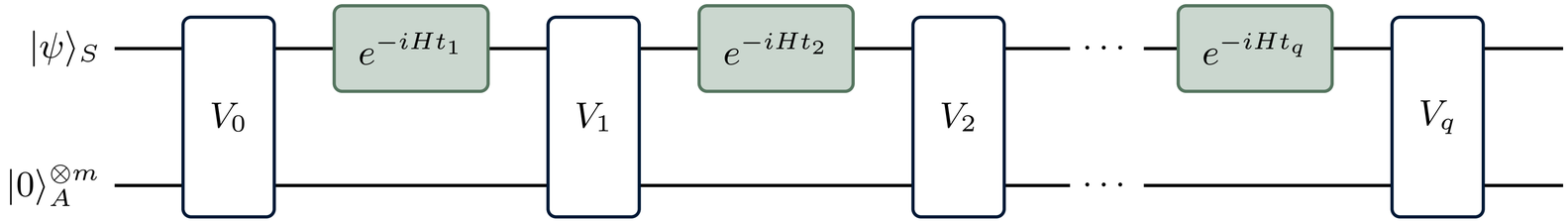

Hamiltonian Property Testing

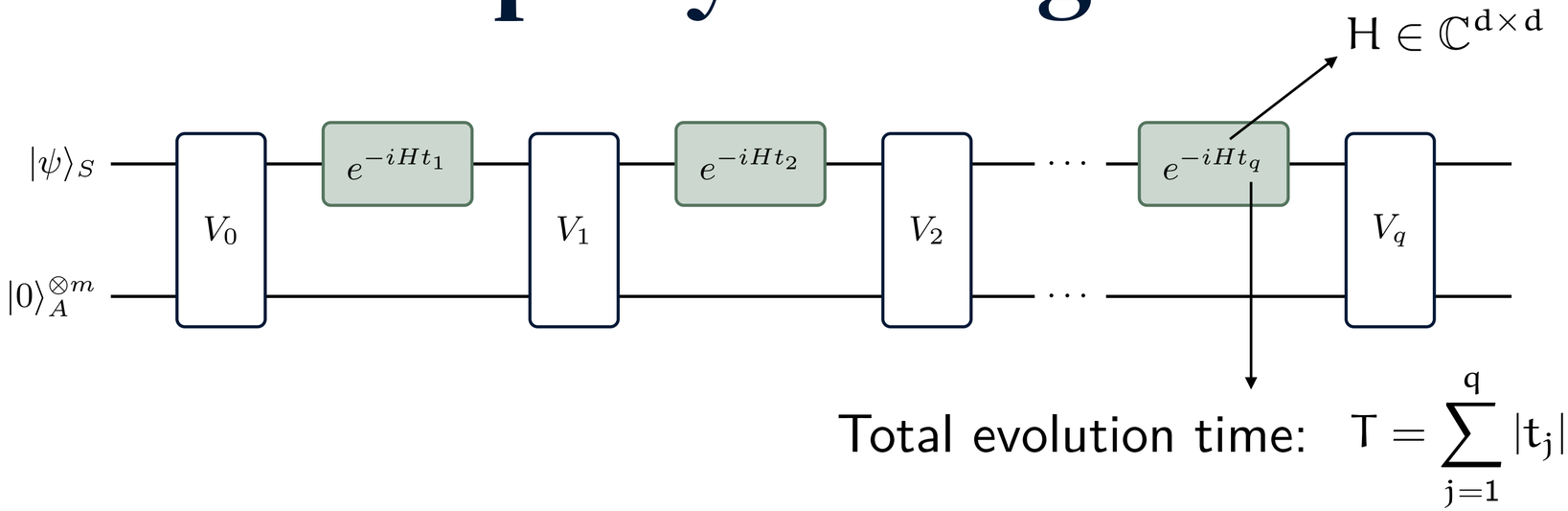

Hamiltonian Property Testing

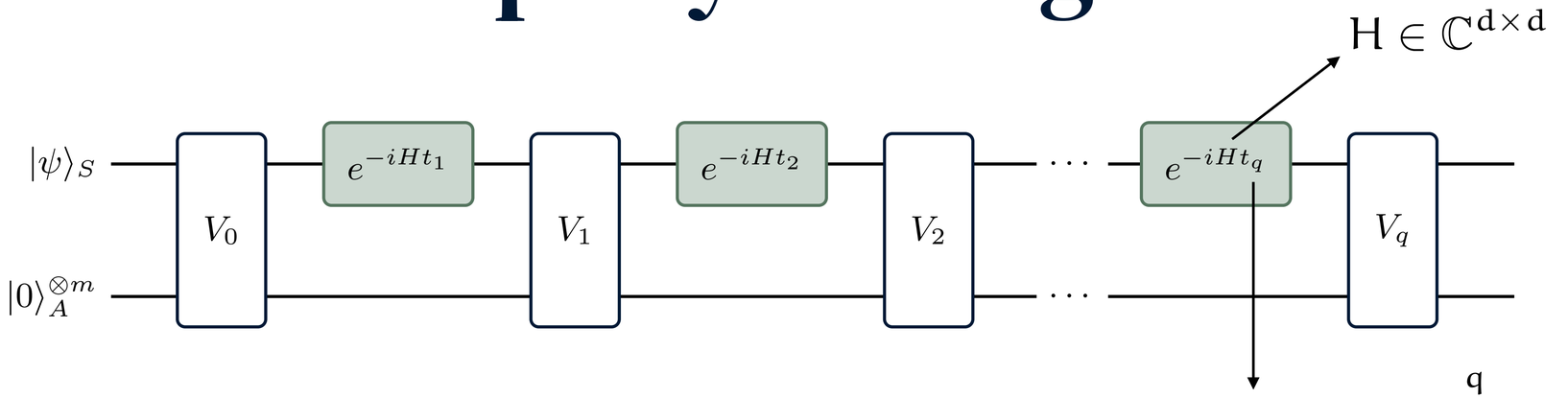

Total evolution time: $T = \sum_{j=1}^{q} |t_j|$

Without time reversal $t_j > 0$; otherwise, $t_j \in \mathbb{R}$

Hamiltonian Property Testing

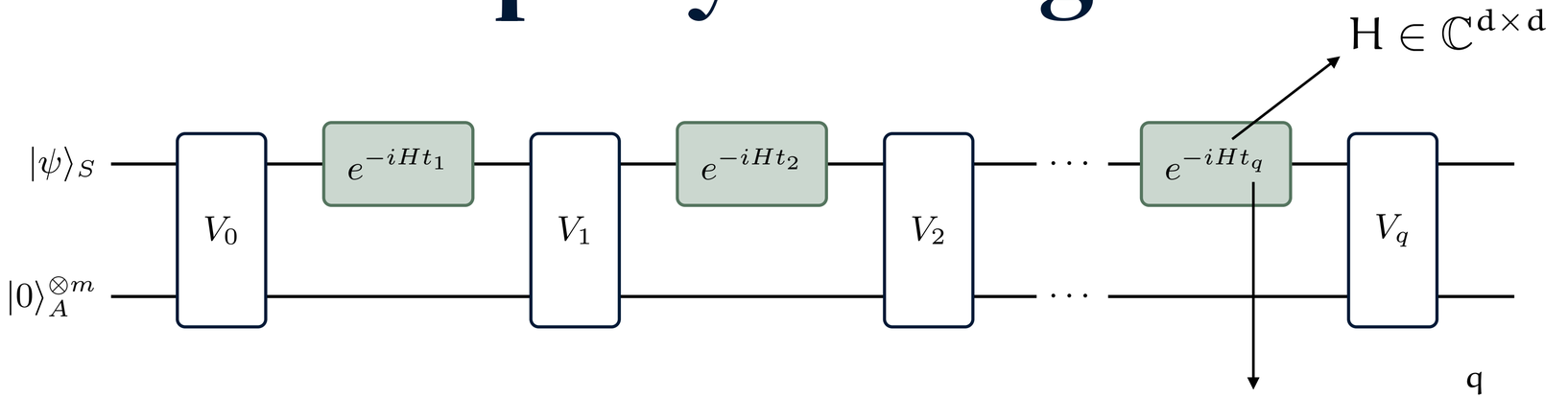

Without time reversal $t_j > 0$; otherwise, $t_j \in \mathbb{R}$

Problem (Hamiltonian certification).

Let H_0 be a known target Hamiltonian. Decide:

(i) if $H = H_0$, accept w/prob. $\geqslant 2/3$

(ii) if $\frac{1}{\sqrt{d}}\|H - H_0\|_F > \varepsilon$, reject w/prob. $\geqslant 2/3$

Hamiltonian Property Testing

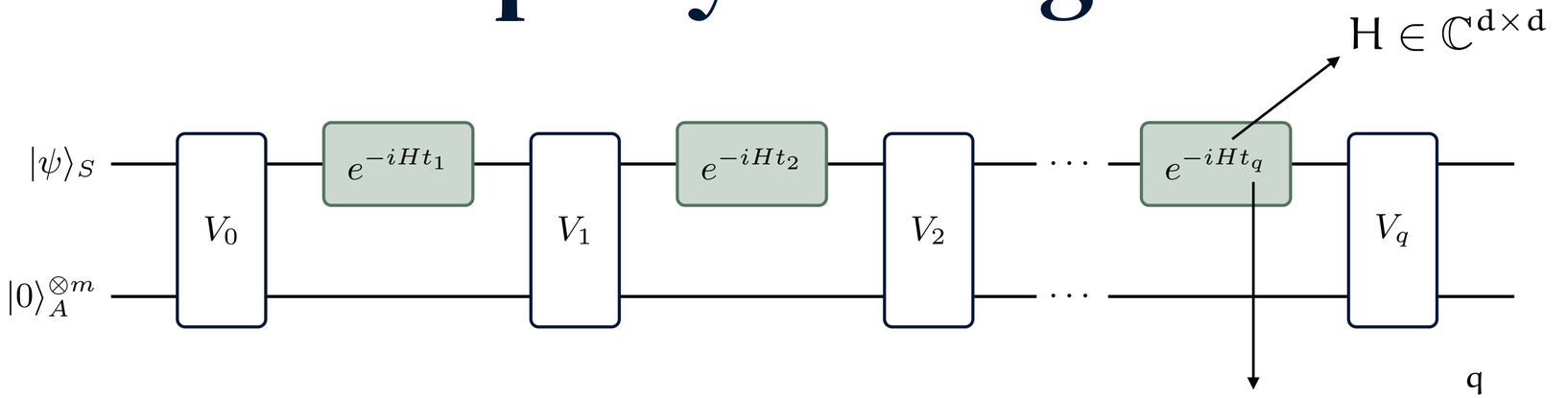

Without time reversal $t_j > 0$; otherwise, $t_j \in \mathbb{R}$

Problem (Hamiltonian certification).

Let H_0 be a known target Hamiltonian. Decide:

(i) if $H = H_0$, accept w/prob. $\geqslant 2/3$

(ii) if $\frac{1}{\sqrt{d}}\|H - H_0\|_F > \varepsilon$, reject w/prob. $\geqslant 2/3$

Average-case rate of distinguishability

Hamiltonian Property Testing

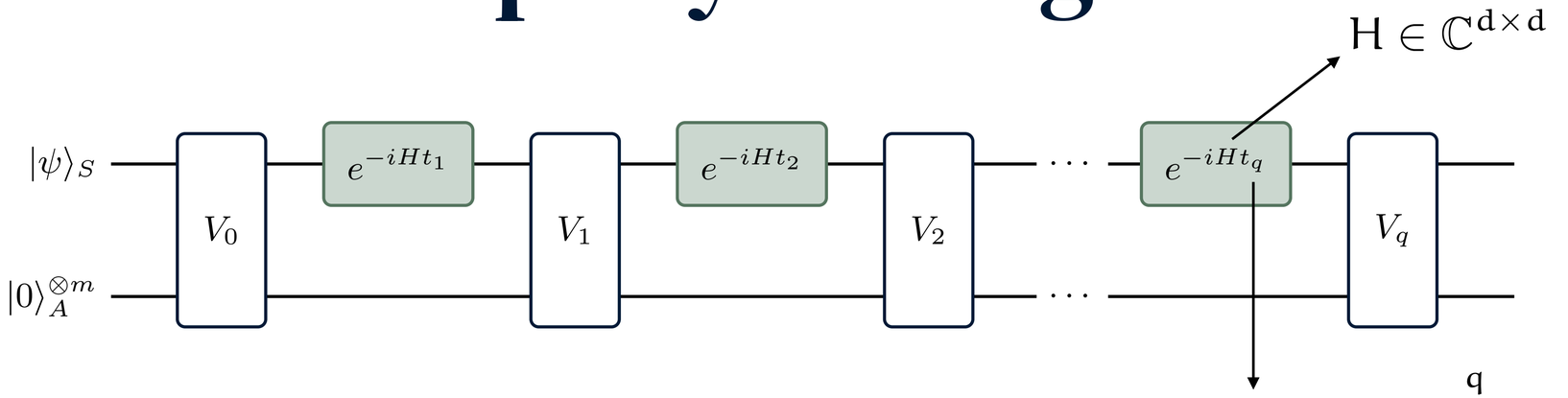

Total evolution time: $T = \sum_{j=1}^{q} |t_j|$

Without time reversal $t_j > 0$; otherwise, $t_j \in \mathbb{R}$

Hamiltonian Property Testing

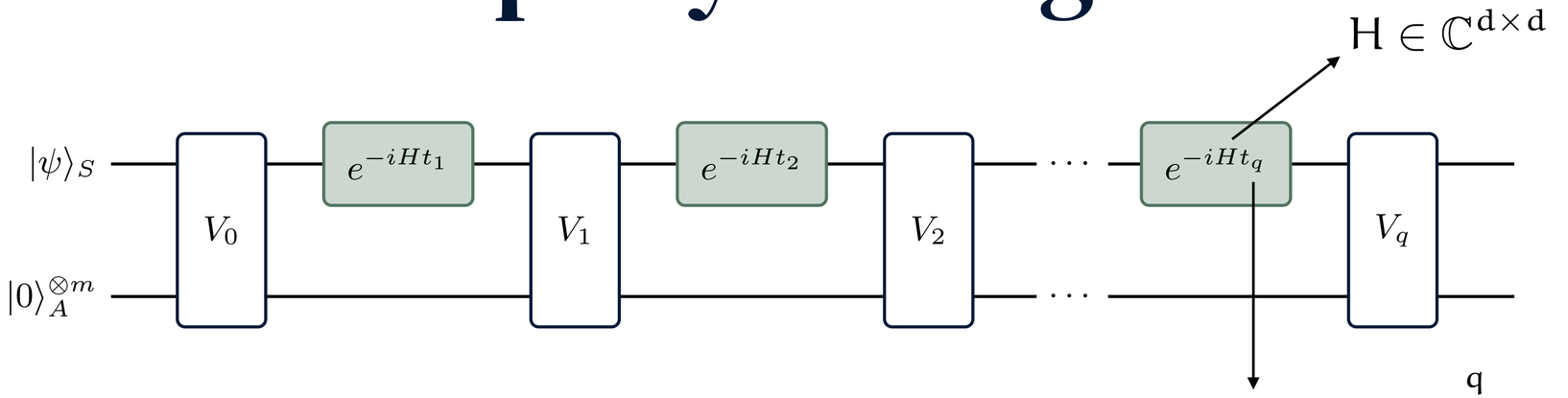

Without time reversal $t_j > 0$; otherwise, $t_j \in \mathbb{R}$

Problem (Hamiltonian locality testing).

Let k be a positive integer. Decide:

(i) if H is k-local, accept w/prob. $\geqslant 2/3$

(ii) if H is ε-far from k-local, reject w/prob. $\geqslant 2/3$

Prior Work

	Upper Bound on Evolution Time	
With time reversal	$T = O(1/\varepsilon)$ *Heisenberg limit*	[Kallaugher & Liang, TQC'25] [Gao et al., SODA'26]
Without time reversal	$T = O(1/\varepsilon^2)$ *Standard quantum limit*	[Kallaugher & Liang, TQC'25] [Sinha &Tong, '25]

Prior Work

	Upper Bound on Evolution Time	
With time reversal	$T = O(1/\varepsilon)$ *Heisenberg limit*	[Kallaugher & Liang, TQC'25] [Gao et al., SODA'26]
Without time reversal	$T = O(1/\varepsilon^2)$ *Standard quantum limit*	[Kallaugher & Liang, TQC'25] [Sinha &Tong, '25]

Q: is time reversal required for Heisenberg-limited scaling?

Prior Work

Problem (Amplitude Estimation).

Given U on $n+1$ qubits such that

$$U|0^{n+1}\rangle = a|\phi_1\rangle|1\rangle + \sqrt{1-a^2}|\phi_0\rangle|0\rangle$$

output $\hat{a}$ such that $|\hat{a}-a| < \varepsilon$ w/prob. $\geqslant 2/3$, using as few queries to U and $U^\dagger$ as possible.

Prior Work

Problem (Amplitude Estimation).

Given U on $n+1$ qubits such that

$$U|0^{n+1}\rangle = a|\phi_1\rangle|1\rangle + \sqrt{1-a^2}|\phi_0\rangle|0\rangle$$

output $\hat{a}$ such that $|\hat{a}-a| < \varepsilon$ w/prob. $\geqslant 2/3$, using as few queries to U and $U^\dagger$ as possible.

	Number of Queries	
Access to U and $U^\dagger$	$O(1/\varepsilon)$	[Brassard, Hoyer, Mosca, & Tapp, Quantum Computation and Information'02]
Access only to U	$\Omega(1/\varepsilon^2)$	[Tang & Wright, QIP'26]

Prior Work

Problem (Amplitude Estimation).

Given U on $n+1$ qubits such that

$$U|0^{n+1}\rangle = a|\phi_1\rangle|1\rangle + \sqrt{1-a^2}|\phi_0\rangle|0\rangle$$

output $\hat{a}$ such that $|\hat{a}-a| < \varepsilon$ w/prob. $\geqslant 2/3$, using as few queries to U and $U^\dagger$ as possible.

	Number of Queries	
Access to U and $U^\dagger$	$O(1/\varepsilon)$	[Brassard, Hoyer, Mosca, & Tapp, Quantum Computation and Information'02]
Access only to U	$\Omega(1/\varepsilon^2)$	[Tang & Wright, QIP'26]

$\varepsilon \gg 1/\sqrt{d}$

Discrete Queries are Different

Q: Does this prove time reversal is required?

A: No, discrete queries are different...

Discrete Queries are Different

1. Intuitively, continuous is different because of new tools, e.g., Trotterization.
2. In Hamiltonian learning, $O(1/\varepsilon)$ evolution time is achievable with continuous queries, but with discrete queries (long time) you are restricted to $\Omega(1/\varepsilon^2)$.
3. Compressed oracle (as in [Tang & Wright, QIP'26]) breaks in continuous time.

Discrete Queries are Different

1. Intuitively, continuous is different because of new tools, e.g., Trotterization.
2. In Hamiltonian learning, $O(1/\varepsilon)$ evolution time is achievable with continuous queries, but with discrete queries (long time) you are restricted to $\Omega(1/\varepsilon^2)$.
3. Compressed oracle (as in [Tang & Wright, QIP'26]) breaks in continuous time.

Discrete Queries are Different

1. Intuitively, continuous is different because of new tools, e.g., Trotterization.
2. In Hamiltonian learning, $O(1/\varepsilon)$ evolution time is achievable with continuous queries, but with discrete queries (long time) you are restricted to $\Omega(1/\varepsilon^2)$.
3. Compressed oracle (as in [Tang & Wright, QIP'26]) breaks in continuous time.

Key Technical Challenge

- We need a quantum lower bound technique that:
  (i) works in the continuous-time setting
  (ii) Is sensitive to forward-only versus time-reversed access

Key Technical Challenge

- We need a quantum lower bound technique that:
  (i) works in the continuous-time setting
  (ii) Is sensitive to forward-only versus time-reversed access

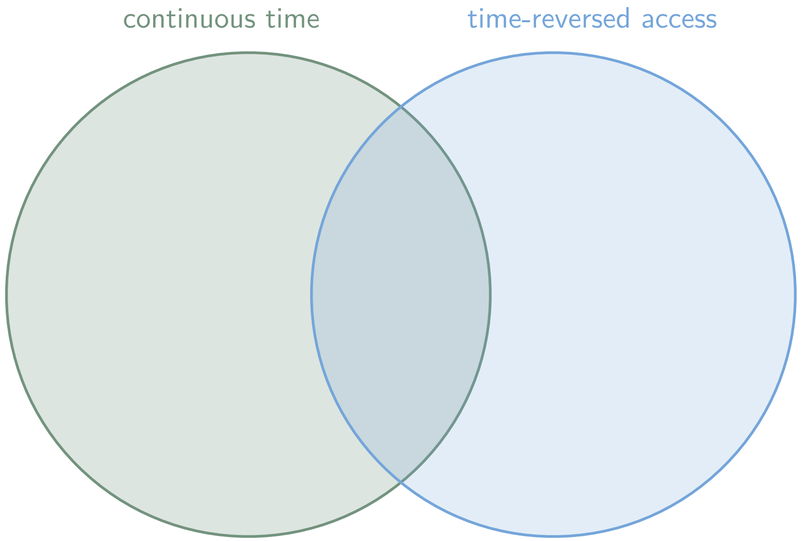

Key Technical Challenge

- We need a quantum lower bound technique that:
  (i) works in the continuous-time setting
  (ii) Is sensitive to forward-only versus time-reversed access

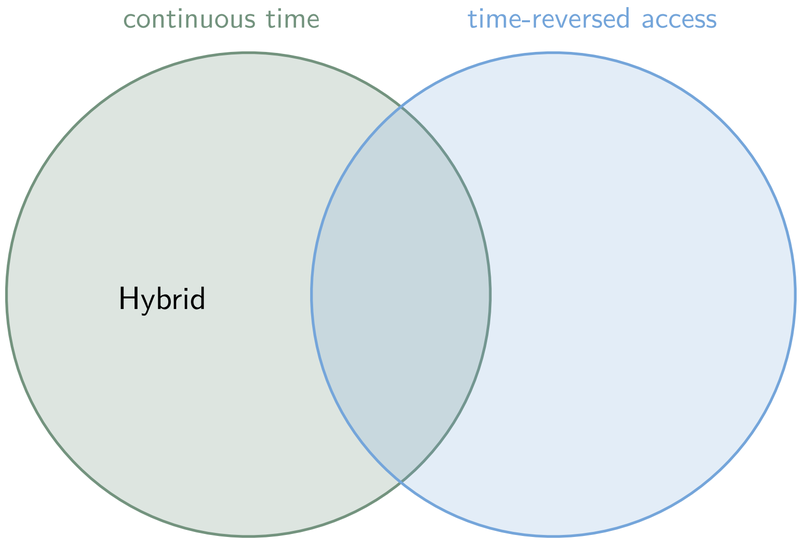

Key Technical Challenge

- We need a quantum lower bound technique that:
  (i) works in the continuous-time setting
  (ii) Is sensitive to forward-only versus time-reversed access

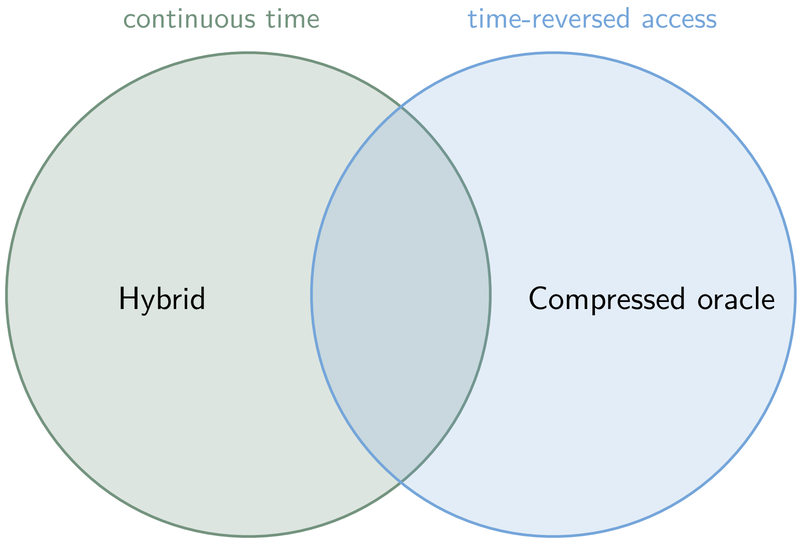

Key Technical Challenge

- We need a quantum lower bound technique that:
  (i) works in the continuous-time setting
  (ii) Is sensitive to forward-only versus time-reversed access

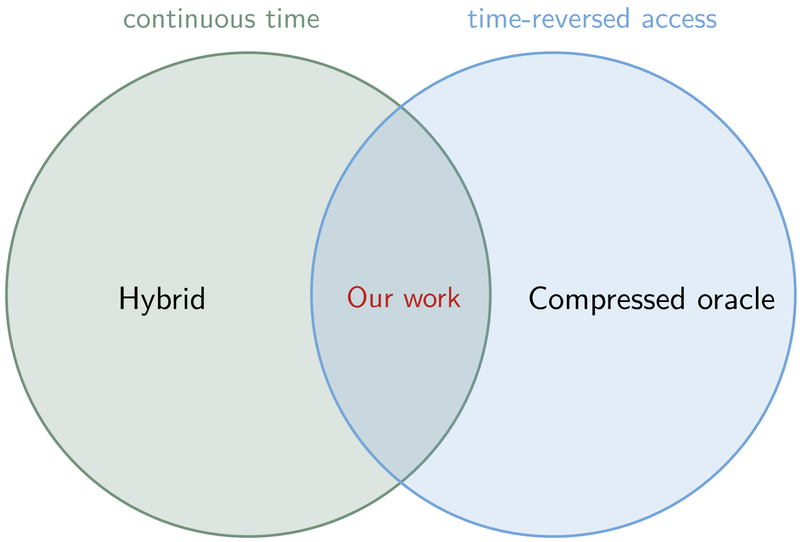

Outline

1. Background & Problem Statement
2. Main Results
3. Proof Sketch
4. Conclusion & Future Directions

Hamiltonian Certification

Theorem (Hamiltonian certification without time reversal [This work]).

Any quantum algorithm without time reversal for Hamiltonian certification requires a total evolution time

$$T = \Omega\left(\min\left\{\frac{1}{\varepsilon^2}, \frac{\sqrt{d}}{\varepsilon}\right\}\right).$$

Hamiltonian Certification

Theorem (Hamiltonian certification without time reversal [This work]).

Any quantum algorithm without time reversal for Hamiltonian certification requires a total evolution time

$$T = \Omega\left(\min\left\{\frac{1}{\varepsilon^2}, \frac{\sqrt{d}}{\varepsilon}\right\}\right).$$

*See also [Gutiérrez, Lee, & Zur, '26], which independently established $\Omega(1/\varepsilon^2)$ using different techniques

Hamiltonian Certification

Theorem (Hamiltonian certification without time reversal [This work]).

Any quantum algorithm without time reversal for Hamiltonian certification requires a total evolution time

$$T = \Omega\left(\min\left\{\frac{1}{\varepsilon^2}, \frac{\sqrt{d}}{\varepsilon}\right\}\right).$$

*See also [Gutiérrez, Lee, & Zur, '26], which independently established $\Omega(1/\varepsilon^2)$ using different techniques

- In fact, this is tight

Hamiltonian Certification

Theorem (Hamiltonian certification without time reversal [This work]).

Any quantum algorithm without time reversal for Hamiltonian certification requires a total evolution time

$$T = \Omega\left(\min\left\{\frac{1}{\varepsilon^2}, \frac{\sqrt{d}}{\varepsilon}\right\}\right).$$

*See also [Gutiérrez, Lee, & Zur, '26], which independently established $\Omega(1/\varepsilon^2)$ using different techniques

- In fact, this is tight
- And for certification with arbitrary Schatten p-norm (from average- to worst-case distinguishability):

$$T = \Theta\left(\min\left\{\frac{1}{\varepsilon^p}, \frac{d^{1-1/p}}{\varepsilon}\right\}\right)$$

Hamiltonian Certification

Theorem (Hamiltonian certification without time reversal [This work]).

Any quantum algorithm without time reversal for Hamiltonian certification requires a total evolution time

$$T = \Omega\left(\min\left\{\frac{1}{\varepsilon^2}, \frac{\sqrt{d}}{\varepsilon}\right\}\right).$$

*See also [Gutiérrez, Lee, & Zur, '26], which independently established $\Omega(1/\varepsilon^2)$ using different techniques

- In fact, this is tight
- And for certification with arbitrary Schatten p-norm (from average- to worst-case distinguishability):

$$T = \Theta\left(\min\left\{\frac{1}{\varepsilon^p}, \frac{d^{1-1/p}}{\varepsilon}\right\}\right)$$

- Same lower bound holds for locality testing

Amplitude Estimation

Corollary (Amplitude estimation without inverses [This work]).

Given only the ability to apply U and not its inverse, any algorithm for amplitude estimation requires

$$\Omega\left(\min\left\{\frac{1}{\varepsilon^2}, \frac{\sqrt{d}}{\varepsilon}\right\}\right)$$

queries, even with fractional queries.

*See also [Gutiérrez, Lee, & Zur, '26], which independently established $\Omega(1/\varepsilon^2)$ using different techniques

Amplitude Estimation

Corollary (Amplitude estimation without inverses [This work]).

Given only the ability to apply U and not its inverse, any algorithm for amplitude estimation requires

$$\Omega\left(\min\left\{\frac{1}{\varepsilon^2}, \frac{\sqrt{d}}{\varepsilon}\right\}\right)$$

queries, even with fractional queries.

*See also [Gutiérrez, Lee, & Zur, '26], which independently established $\Omega(1/\varepsilon^2)$ using different techniques

- Extends results in [Tang & Wright, QIP'26] to fractional queries

Amplitude Estimation

Corollary (Amplitude estimation without inverses [This work]).

Given only the ability to apply U and not its inverse, any algorithm for amplitude estimation requires

$$\Omega\left(\min\left\{\frac{1}{\varepsilon^2}, \frac{\sqrt{d}}{\varepsilon}\right\}\right)$$

queries, even with fractional queries.

*See also [Gutiérrez, Lee, & Zur, '26], which independently established $\Omega(1/\varepsilon^2)$ using different techniques

- Extends results in [Tang & Wright, QIP'26] to fractional queries
- Improved lower bound in the high-precision regime where $\varepsilon \ll d^{-1/2}$

No Robust Quantum Advantage in Search

Let

$$O_f^\theta = \sum_{x=1}^{d} e^{i\theta_x f(x)} |x\rangle\langle x|$$

for some unknown angles $\theta_x \in [\pi - \Delta, \pi + \Delta]$ and unknown f that marks $\Theta(1)$ elements.

No Robust Quantum Advantage in Search

Let

$$O_f^\theta = \sum_{x=1}^{d} e^{i\theta_x f(x)} |x\rangle\langle x|$$

for some unknown angles $\theta_x \in [\pi - \Delta, \pi + \Delta]$ and unknown f that marks $\Theta(1)$ elements.

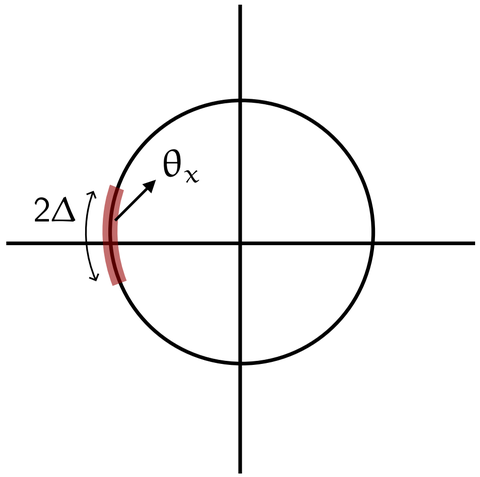

No Robust Quantum Advantage in Search

Let

$$O_f^\theta = \sum_{x=1}^{d} e^{i\theta_x f(x)} |x\rangle\langle x|$$

for some unknown angles $\theta_x \in [\pi - \Delta, \pi + \Delta]$ and unknown f that marks $\Theta(1)$ elements.

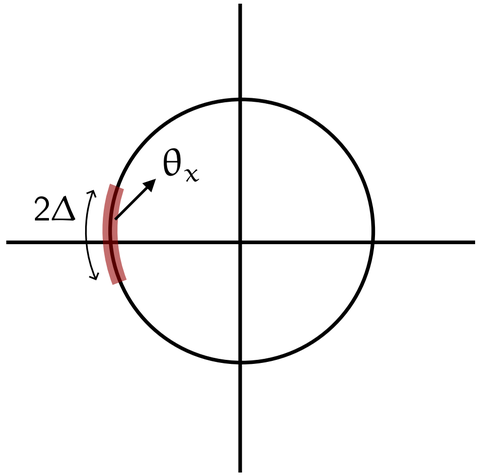

Theorem (No-go for quantum search [This work]).

Given only the ability to apply O_f^θ and not its inverse, any algorithm for search requires at least $\Omega(d\Delta)$ applications of O_f^θ.

No Robust Quantum Advantage in Search

Let

$$O_f^\theta = \sum_{x=1}^{d} e^{i\theta_x f(x)} |x\rangle\langle x|$$

for some unknown angles $\theta_x \in [\pi - \Delta, \pi + \Delta]$ and unknown f that marks $\Theta(1)$ elements.

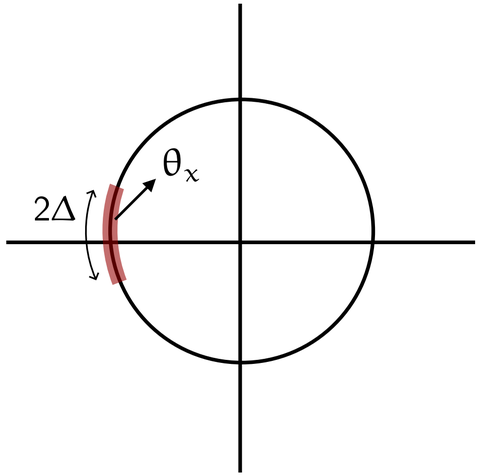

Theorem (No-go for quantum search [This work]).

Given only the ability to apply O_f^θ and not its inverse, any algorithm for search requires at least $\Omega(d\Delta)$ applications of O_f^θ.

- By contrast, with inverse access, $O(\sqrt{d})$ applications suffice [Hoyer, Mosca, & deWolfe, '03]

No Robust Quantum Advantage in Search

Let

$$O_f^\theta = \sum_{x=1}^{d} e^{i\theta_x f(x)} |x\rangle\langle x|$$

for some unknown angles $\theta_x \in [\pi - \Delta, \pi + \Delta]$ and unknown f that marks $\Theta(1)$ elements.

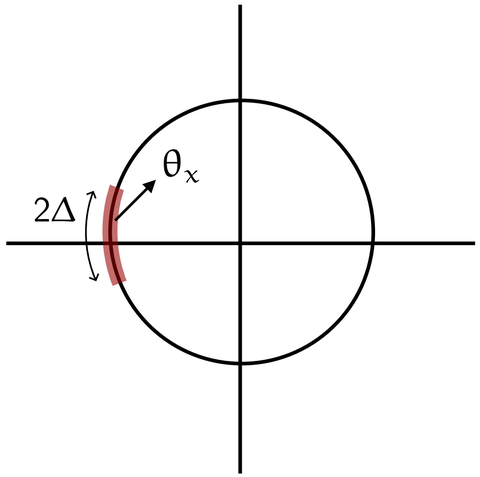

Theorem (No-go for quantum search [This work]).

Given only the ability to apply O_f^θ and not its inverse, any algorithm for search requires at least $\Omega(d\Delta)$ applications of O_f^θ.

- By contrast, with inverse access, $O(\sqrt{d})$ applications suffice [Hoyer, Mosca, & deWolfe, '03]
- Distinct from no-go results based on noisy channels [Regev & Schiff, '12]

Overview

1. Background & Problem Statement
2. Main Results
3. Proof Sketch
4. Conclusion & Future Directions

Proof Checklist

1. Construct the hardest possible random Hamiltonian H to distinguish from zero
2. Check that it is still ε-far, so the certification algorithm is successful
3. Bound distinguishability as a function of total evolution time

New techniques needed: (i) hybrid method and (ii) compressed oracle method fail

A Hard Distinguishing Task

$$H = \sum_{j=1}^{d} h_j |j\rangle\langle j| = \begin{pmatrix} h_1 & 0 & \cdots & 0 \\ 0 & h_2 & \ddots & \vdots \\ \vdots & \ddots & \ddots & 0 \\ 0 & \cdots & 0 & h_d \end{pmatrix}$$

A Hard Distinguishing Task

$$H = \sum_{j=1}^{d} h_j |j\rangle\langle j| = \begin{pmatrix} h_1 & 0 & \cdots & 0 \\ 0 & h_2 & \ddots & \vdots \\ \vdots & \ddots & \ddots & 0 \\ 0 & \cdots & 0 & h_d \end{pmatrix}$$

where $h_1, \ldots, h_d$ are iid copies of $\beta\theta$, for $\beta \sim \mathrm{Ber}(\varepsilon^2)$ and $\theta \sim \mathrm{Unif}([-\sigma, \sigma])$

A Hard Distinguishing Task

$$H = \sum_{j=1}^{d} h_j |j\rangle\langle j| = \begin{pmatrix} h_1 & 0 & \cdots & 0 \\ 0 & h_2 & \ddots & \vdots \\ \vdots & \ddots & \ddots & 0 \\ 0 & \cdots & 0 & h_d \end{pmatrix}$$

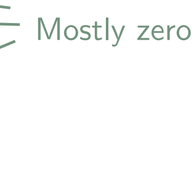

where $h_1, \ldots, h_d$ are iid copies of $\beta\theta$, for $\beta \sim \mathrm{Ber}(\varepsilon^2)$ and $\theta \sim \mathrm{Unif}([-\sigma, \sigma])$

A Hard Distinguishing Task

$$H = \sum_{j=1}^{d} h_j |j\rangle\langle j| = \begin{pmatrix} h_1 & 0 & \cdots & 0 \\ 0 & h_2 & \ddots & \vdots \\ \vdots & \ddots & \ddots & 0 \\ 0 & \cdots & 0 & h_d \end{pmatrix}$$

Mostly zero

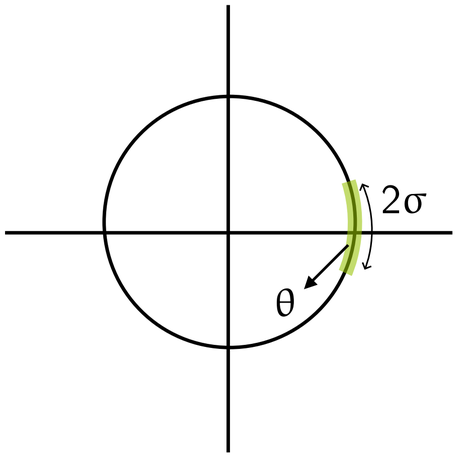

where $h_1, \ldots, h_d$ are iid copies of $\beta\theta$, for $\beta \sim \mathrm{Ber}(\varepsilon^2)$ and $\theta \sim \mathrm{Unif}([-\sigma, \sigma])$

A Hard Distinguishing Task

$$H = \sum_{j=1}^{d} h_j |j\rangle\langle j| = \begin{pmatrix} h_1 & 0 & \cdots & 0 \\ 0 & h_2 & \ddots & \vdots \\ \vdots & \ddots & \ddots & 0 \\ 0 & \cdots & 0 & h_d \end{pmatrix}$$

Mostly zero

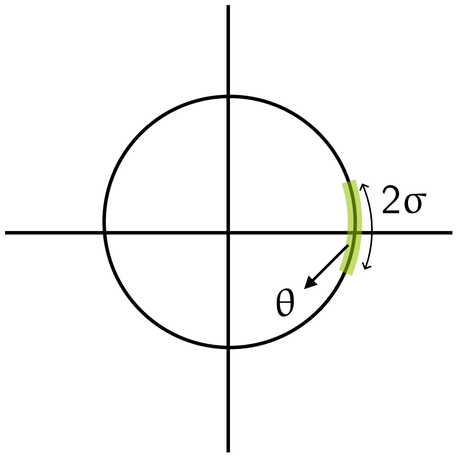

where $h_1, \ldots, h_d$ are iid copies of $\beta\theta$, for $\beta \sim \mathrm{Ber}(\varepsilon^2)$ and $\theta \sim \mathrm{Unif}([-\sigma, \sigma])$

Q1: is H ε-far from zero?

A Hard Distinguishing Task

$$H = \sum_{j=1}^{d} h_j |j\rangle\langle j| = \begin{pmatrix} h_1 & 0 & \cdots & 0 \\ 0 & h_2 & \ddots & \vdots \\ \vdots & \ddots & \ddots & 0 \\ 0 & \cdots & 0 & h_d \end{pmatrix}$$

Mostly zero

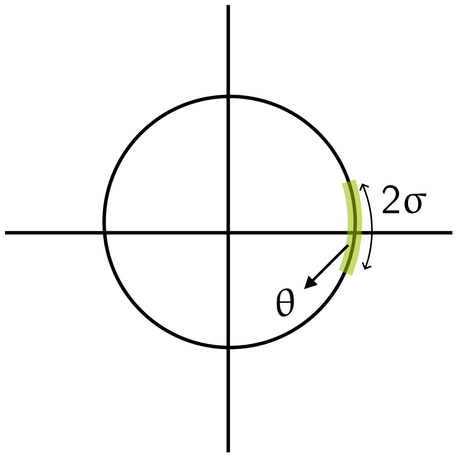

where $h_1, \ldots, h_d$ are iid copies of $\beta\theta$, for $\beta \sim \mathrm{Ber}(\varepsilon^2)$ and $\theta \sim \mathrm{Unif}([-\sigma, \sigma])$

Q1: is H ε-far from zero?
A: Yes.

A Hard Distinguishing Task

$$H = \sum_{j=1}^{d} h_j |j\rangle\langle j| = \begin{pmatrix} h_1 & 0 & \cdots & 0 \\ 0 & h_2 & \ddots & \vdots \\ \vdots & \ddots & \ddots & 0 \\ 0 & \cdots & 0 & h_d \end{pmatrix}$$

Mostly zero

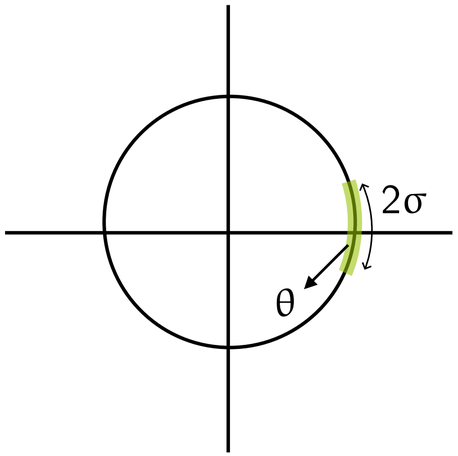

where $h_1, \ldots, h_d$ are iid copies of $\beta\theta$, for $\beta \sim \mathrm{Ber}(\varepsilon^2)$ and $\theta \sim \mathrm{Unif}([-\sigma, \sigma])$

Q1: is H ε-far from zero?
A: Yes.

Q2: is H hard to distinguish from zero?

A Hard Distinguishing Task

$$H = \sum_{j=1}^{d} h_j |j\rangle\langle j| = \begin{pmatrix} h_1 & 0 & \cdots & 0 \\ 0 & h_2 & \ddots & \vdots \\ \vdots & \ddots & \ddots & 0 \\ 0 & \cdots & 0 & h_d \end{pmatrix}$$

Mostly zero

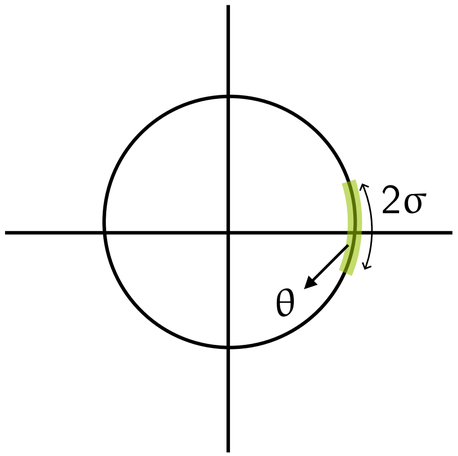

where $h_1, \ldots, h_d$ are iid copies of $\beta\theta$, for $\beta \sim \mathrm{Ber}(\varepsilon^2)$ and $\theta \sim \mathrm{Unif}([-\sigma, \sigma])$

Q1: is H ε-far from zero?
A: Yes.

Theorem.

Any quantum algorithm to distinguish H from zero without time reversal requires a total evolution time $T = \Omega(1/\varepsilon^2)$.

Proof Checklist

1. ~~Construct the hardest possible random Hamiltonian H to distinguish from zero~~
2. ~~Check that it is still ϵ far, so the certification algorithm is successful~~
3. Bound distinguishability as a function of total evolution time

New techniques needed: (i) hybrid method and (ii) compressed oracle method fail

Bounding Distinguishability

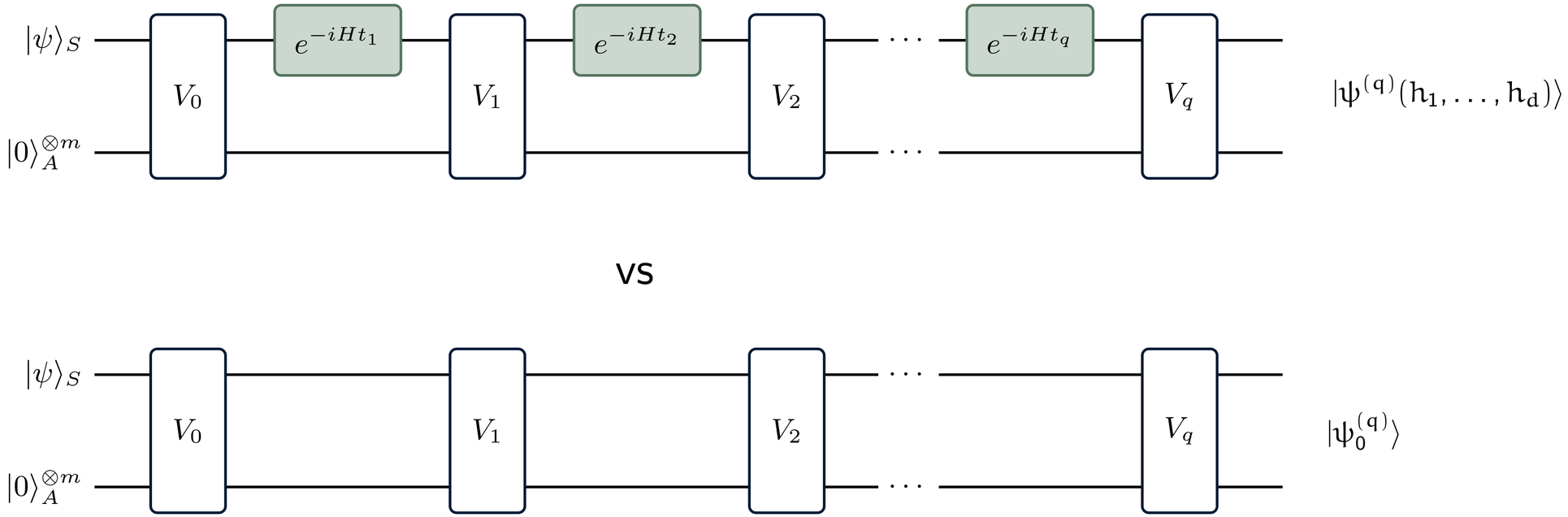

Bounding Distinguishability

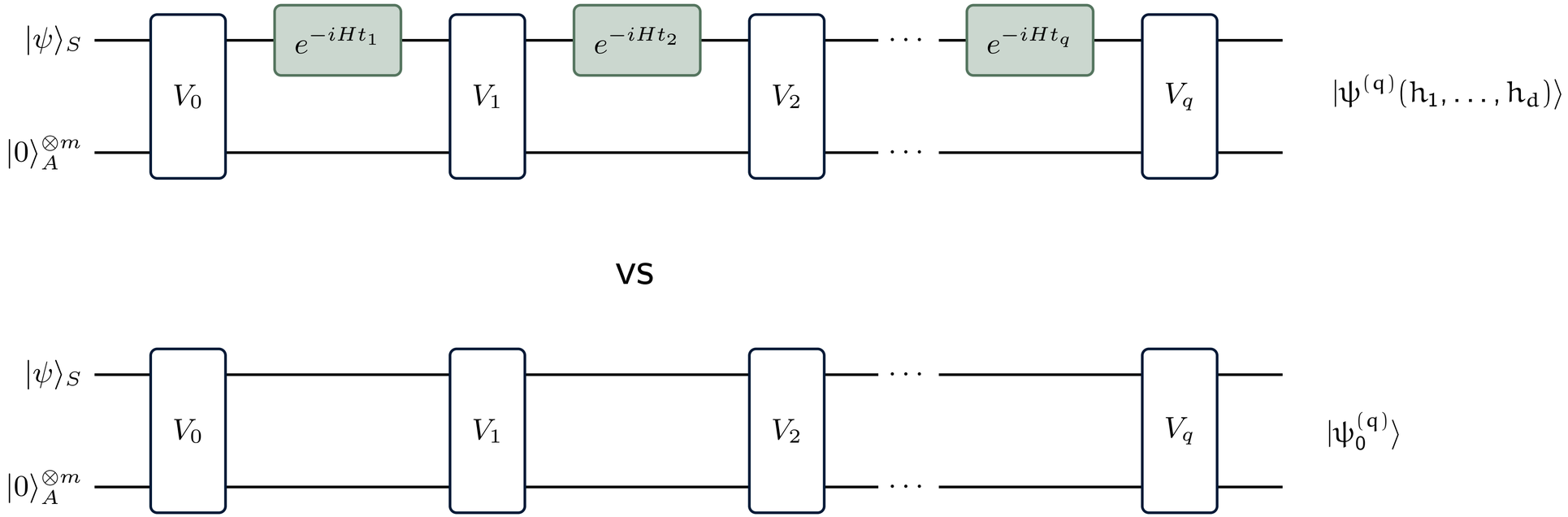

Squared trace distance upper bounded by $\mathfrak{p} \coloneqq \mathbb{E}\,\|(I - |\psi_0^{(q)}\rangle\langle\psi_0^{(q)}|)|\psi^{(q)}(h_1,\ldots,h_d)\rangle\|_2^2$

Bounding Distinguishability

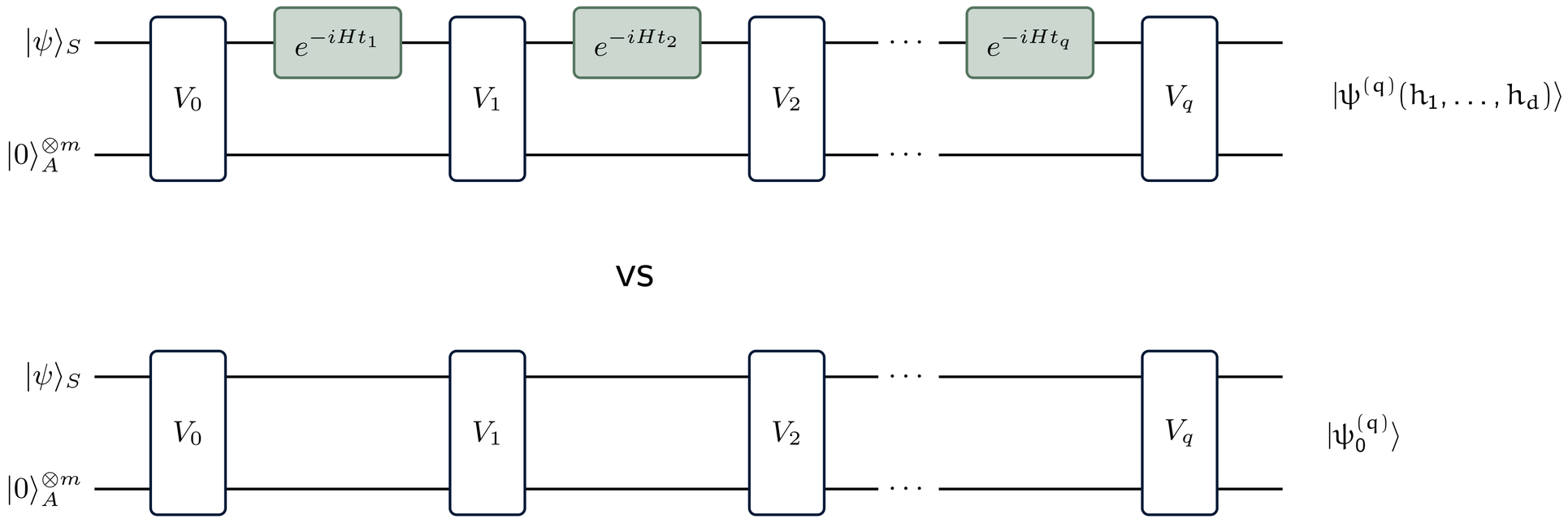

Squared trace distance upper bounded by $\mathfrak{p} \coloneqq \mathbb{E}\,\|(I - |\psi_0^{(q)}\rangle\langle\psi_0^{(q)}|)|\psi^{(q)}(h_1,\ldots,h_d)\rangle\|_2^2$

Q: Can we show $\mathfrak{p} \leqslant O(\varepsilon^2 T)$?

Note: *not* $O(\varepsilon^2 T^2)$

Diffusive vs ballistic growth of *distinguishability*

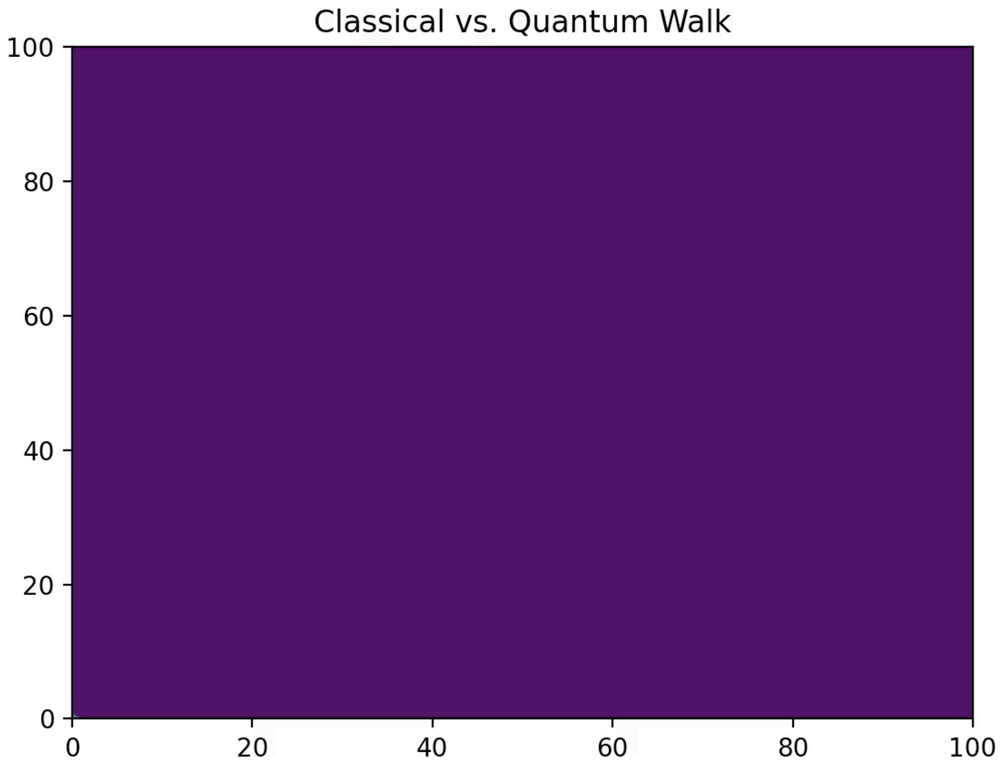
Classical vs. Quantum Walk
100
80
60
40
20
0
0
20
40
60
80
100

Isolate Hamiltonian Terms

$$\mathfrak{p} \coloneqq \mathbb{E} \left\| (I - |\psi_0^{(q)}\rangle\langle\psi_0^{(q)}|)|\psi^{(q)}(h_1, \ldots, h_d)\rangle \right\|_2^2 \qquad \textbf{Want: } \mathfrak{p} \leqslant O(\varepsilon^2 T)$$

- **Idea:** let's focus on *one random variable at a time*

Isolate Hamiltonian Terms

$$\mathfrak{p} \coloneqq \mathbb{E}\,\|(I - |\psi_0^{(q)}\rangle\langle\psi_0^{(q)}|)|\psi^{(q)}(h_1,\ldots,h_d)\rangle\|_2^2 \qquad \textbf{Want: } \mathfrak{p} \leqslant O(\varepsilon^2 T)$$

- **Idea:** let's focus on *one random variable at a time*
- *Efron-Stein inequality*: for iid random variables $x_1, \ldots, x_n$

$$\mathrm{Var}[f(x_1,\ldots,x_n)] \leqslant \frac{1}{2}\sum_{i=1}^{n} \mathbb{E}\left[\left(f(x_1,\ldots,x_i,\ldots,x_n) - f(x_1,\ldots,x_i',\ldots,x_n)\right)^2\right]$$

where x_i' is a fresh copy of x_i

Isolate Hamiltonian Terms

$$\mathfrak{p} \coloneqq \mathbb{E}\,\|(I - |\psi_0^{(q)}\rangle\langle\psi_0^{(q)}|)|\psi^{(q)}(h_1,\ldots,h_d)\rangle\|_2^2 \qquad \textbf{Want: } \mathfrak{p} \leqslant O(\varepsilon^2 T)$$

- **Idea:** let's focus on *one random variable at a time*
- *Efron-Stein inequality*: for iid random variables $x_1,\ldots,x_n$

$$\mathrm{Var}[f(x_1,\ldots,x_n)] \leqslant \frac{1}{2}\sum_{i=1}^{n}\mathbb{E}\left[\left(f(x_1,\ldots,x_i,\ldots,x_n) - f(x_1,\ldots,x_i',\ldots,x_n)\right)^2\right]$$

  where x_i' is a fresh copy of x_i

- Similar reasoning leads to:

$$\mathfrak{p} \leqslant \sum_{i=1}^{d}\mathbb{E}\||\Delta_i^{(q)}\rangle\|_2^2, \quad |\Delta_i^{(q)}\rangle \coloneqq |\psi^{(q)}(h_1,\ldots,h_i,\ldots,h_d)\rangle - |\psi^{(q)}(h_1,\ldots,0,\ldots,h_d)\rangle$$

Diffusive Growth of Distinguishability

- Now we can focus on one subspace, say, $\Pi_1 = |1\rangle\langle 1|$

Diffusive Growth of Distinguishability

- Now we can focus on one subspace, say, $\Pi_1 = |1\rangle\langle 1|$
- Recall

$$H = \sum_{j=1}^{d} h_j |j\rangle\langle j| = \begin{pmatrix} h_1 & 0 & \cdots & 0 \\ 0 & h_2 & \ddots & \vdots \\ \vdots & \ddots & \ddots & 0 \\ 0 & \cdots & 0 & h_d \end{pmatrix}$$

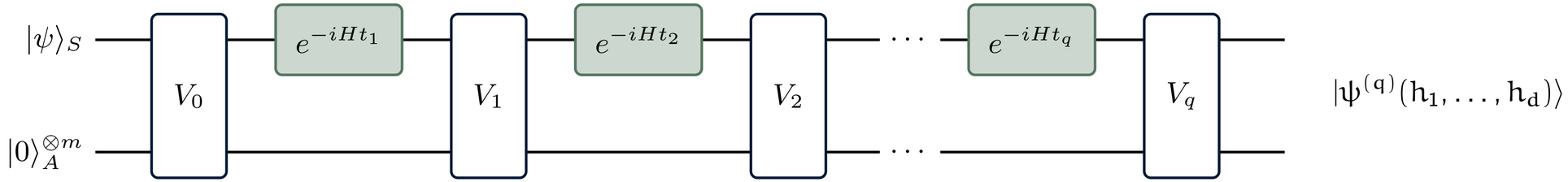

$$|\psi^{(q)}(h_1, \ldots, h_d)\rangle$$

Diffusive Growth of Distinguishability

- Now we can focus on one subspace, say, $\Pi_1 = |1\rangle\langle 1|$
- Recall

$$H = \sum_{j=1}^{d} h_j |j\rangle\langle j| = \begin{pmatrix} h_1 & 0 & \cdots & 0 \\ 0 & h_2 & \ddots & \vdots \\ \vdots & \ddots & \ddots & 0 \\ 0 & \cdots & 0 & h_d \end{pmatrix}$$

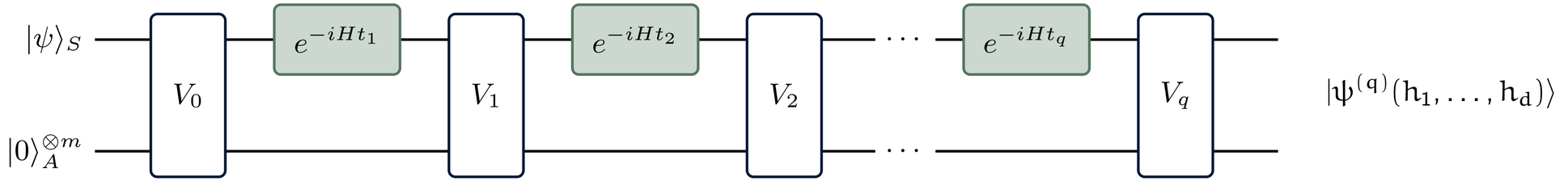

$$\begin{aligned} |\Delta_1^{(q)}\rangle &\coloneqq |\psi^{(q)}(h_1, \ldots, h_d)\rangle - |\psi^{(q)}(0, \ldots, h_d)\rangle \\ &= \sum_{z \in \{0,1\}^q} (e^{-ih_1 \sum_{j:z_j=1} t_j} - 1)|\varphi_z\rangle \\ &=: \sum_{z \in \{0,1\}^q} \tilde{B}_{t_z} |\varphi_z\rangle \end{aligned}$$

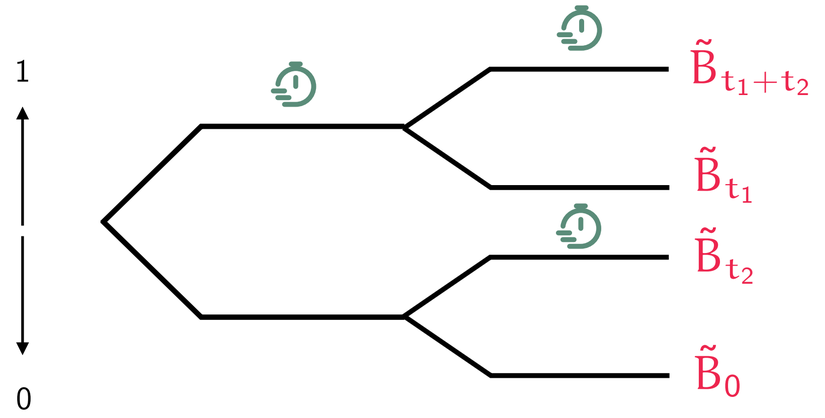

Diffusive Growth of Distinguishability

$$
\begin{aligned}
|\Delta_1^{(q)}\rangle &\coloneqq |\psi^{(q)}(h_1,\dots,h_d)\rangle - |\psi^{(q)}(0,\dots,h_d)\rangle \\
&= \sum_{z\in\{0,1\}^q} (e^{-ih_1\sum_{j:z_j=1} t_j} - 1)|\varphi_z\rangle \\
&=: \sum_{z\in\{0,1\}^q} \tilde{B}_{t_z}|\varphi_z\rangle
\end{aligned}
$$

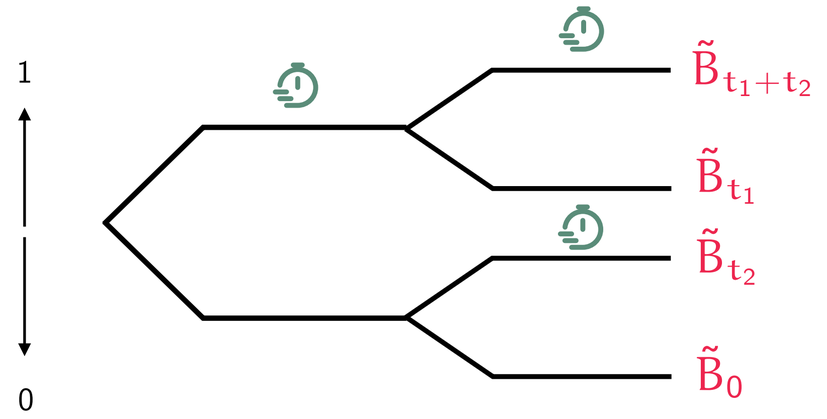

Diffusive Growth of Distinguishability

$$
\begin{aligned}
|\Delta_1^{(q)}\rangle &\coloneqq |\psi^{(q)}(h_1,\dots,h_d)\rangle - |\psi^{(q)}(0,\dots,h_d)\rangle \\
&= \sum_{z\in\{0,1\}^q} \left(e^{-ih_1\sum_{j:z_j=1} t_j} - 1\right)|\varphi_z\rangle \\
&=: \sum_{z\in\{0,1\}^q} \tilde{B}_{t_z}|\varphi_z\rangle
\end{aligned}
$$

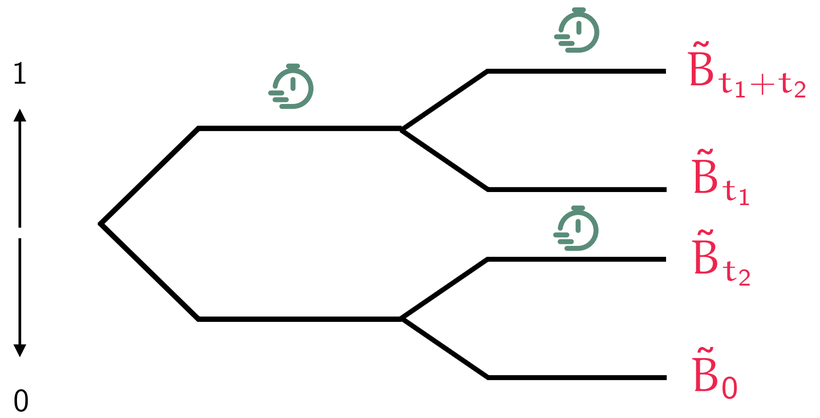

Diffusive Growth of Distinguishability

$$
\begin{aligned}
|\Delta_1^{(q)}\rangle &\coloneqq |\psi^{(q)}(h_1,\dots,h_d)\rangle - |\psi^{(q)}(0,\dots,h_d)\rangle \\
&= \sum_{z\in\{0,1\}^q} (e^{-ih_1\sum_{j:z_j=1} t_j} - 1)|\varphi_z\rangle \\
&=: \sum_{z\in\{0,1\}^q} \tilde{B}_{t_z}|\varphi_z\rangle
\end{aligned}
$$

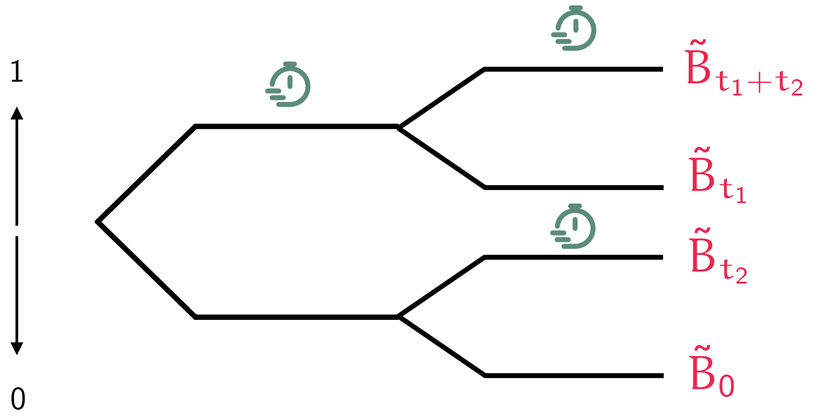

- Suppose we have $\tilde{B}_t$ is a Brownian process. Then $\|\Delta_1^{(q)}\|_2^2$ is the variance of some linear observable.

Diffusive Growth of Distinguishability

$$
\begin{aligned}
|\Delta_1^{(q)}\rangle &\coloneqq |\psi^{(q)}(h_1,\dots,h_d)\rangle - |\psi^{(q)}(0,\dots,h_d)\rangle \\
&= \sum_{z\in\{0,1\}^q} (e^{-ih_1\sum_{j:z_j=1} t_j} - 1)|\varphi_z\rangle \\
&=: \sum_{z\in\{0,1\}^q} \tilde{B}_{t_z}|\varphi_z\rangle
\end{aligned}
$$

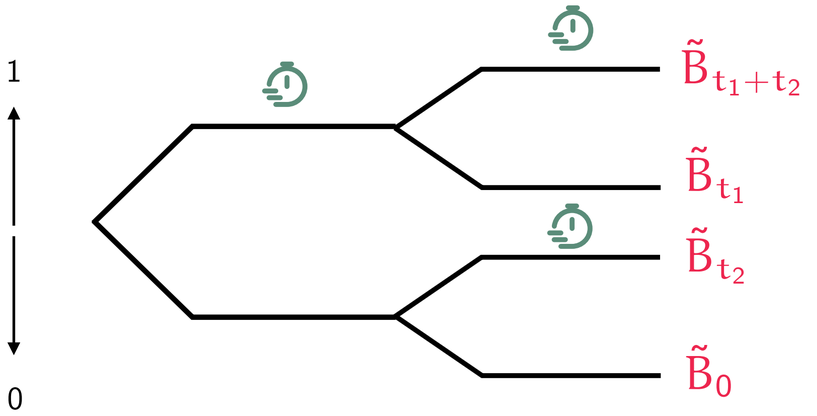

- Suppose we have $\tilde{B}_t$ is a Brownian process. Then $\|\Delta_1^{(q)}\|_2^2$ is the variance of some linear observable.
- This grows diffusively!

$$
\||\Delta_1^{(q)}\rangle\|_2^2 \overset{?}{=} \sum_{j=1}^{q} t_j \langle\psi^{(j-1)}|\Pi_1|\psi^{(j-1)}\rangle
$$

Accumulated time in subspace 1

Diffusive Growth of Distinguishability

$$
\begin{aligned}
|\Delta_1^{(q)}\rangle &\coloneqq |\psi^{(q)}(h_1,\dots,h_d)\rangle - |\psi^{(q)}(0,\dots,h_d)\rangle \\
&= \sum_{z\in\{0,1\}^q} (e^{-ih_1\sum_{j:z_j=1} t_j} - 1)|\varphi_z\rangle \\
&=: \sum_{z\in\{0,1\}^q} \tilde{B}_{t_z}|\varphi_z\rangle
\end{aligned}
$$

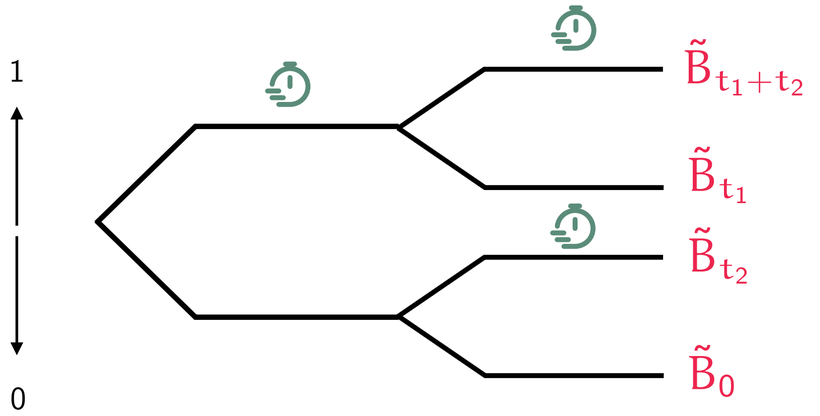

- Suppose we have $\tilde{B}_t$ is a Brownian process. Then $\|\Delta_1^{(q)}\|_2^2$ is the variance of some linear observable.
- This grows diffusively!

$$
\||\Delta_1^{(q)}\rangle\|_2^2 \overset{?}{=} \sum_{j=1}^{q} t_j \langle\psi^{(j-1)}|\Pi_1|\psi^{(j-1)}\rangle
$$

Accumulated time in subspace 1

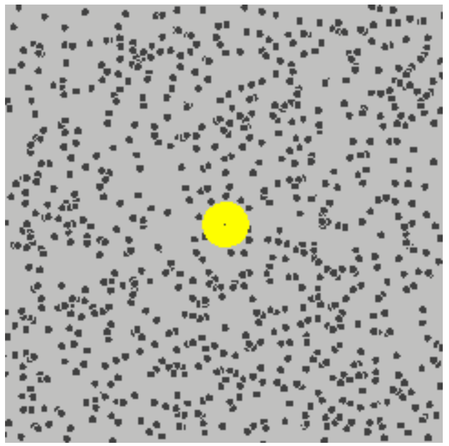

Brownian motion: mean-squared distance grows linearly with time

Connection to Brownian Process

- Recall our actual random process is defined through: $\tilde{B}_t = e^{-ih_1 t} - 1$

Connection to Brownian Process

- Recall our actual random process is defined through: $\tilde{B}_t = e^{-ih_1 t} - 1$
- Define the covariance kernel $K(s,t) \coloneqq \mathbb{E}\, \tilde{B}_s^* \tilde{B}_t$

Connection to Brownian Process

- Recall our actual random process is defined through: $\tilde{B}_t = e^{-ih_1 t} - 1$
- Define the covariance kernel $K(s,t) := \mathbb{E}\,\tilde{B}_s^* \tilde{B}_t$

Lemma (Kernel bound).

For every $t_1, \ldots, t_n \geqslant 0$ and $c_1, \ldots, c_n \in \mathbb{C}$ it holds that

$$\sum_{i,j=1}^{n} c_i^* c_j K(t_i, t_j) \leqslant \pi\varepsilon^2 \sum_{i,j=1}^{n} c_i^* c_j \min(t_i, t_j)$$

Connection to Brownian Process

- Recall our actual random process is defined through: $\tilde{B}_t = e^{-ih_1 t} - 1$
- Define the covariance kernel $K(s,t) \coloneqq \mathbb{E}\, \tilde{B}_s^* \tilde{B}_t$

Lemma (Kernel bound).

For every $t_1, \dots, t_n \geqslant 0$ and $c_1, \dots, c_n \in \mathbb{C}$ it holds that

$$\sum_{i,j=1}^{n} c_i^* c_j K(t_i, t_j) \leqslant \pi\varepsilon^2 \sum_{i,j=1}^{n} c_i^* c_j \min(t_i, t_j)$$

covariance of Brownian process!

Proof Checklist

1. ~~Construct the hardest possible random Hamiltonian H to distinguish from zero~~
2. ~~Check that it is still ϵ far, so the certification algorithm is successful~~
3. ~~Bound distinguishability as a function of total evolution time~~

New techniques needed: (i) hybrid method and (ii) compressed oracle method fail

Recap: (i) Efron-Stein to isolate Hamiltonian terms, (ii) kernel bound to relate amplitudes to Brownian process, (iii) diffusive growth of distinguishability

Overview

1. Background & Problem Statement
2. Main Results
3. Proof Sketch
4. Conclusion & Future Directions

Without time reversal...

- Hamiltonian property testing is restricted to SQL
- Amplitude estimation has classical scaling
- No robust quantum advantage in search

Future directions

- Hardness of reversing time in quantum experiments (e.g., local Hamiltonians)
- Robustness of quantum oracle speedups to imperfections
- Applications of our method to other quantum lower bounds

arXiv:2610.04996